Accent

Appeal

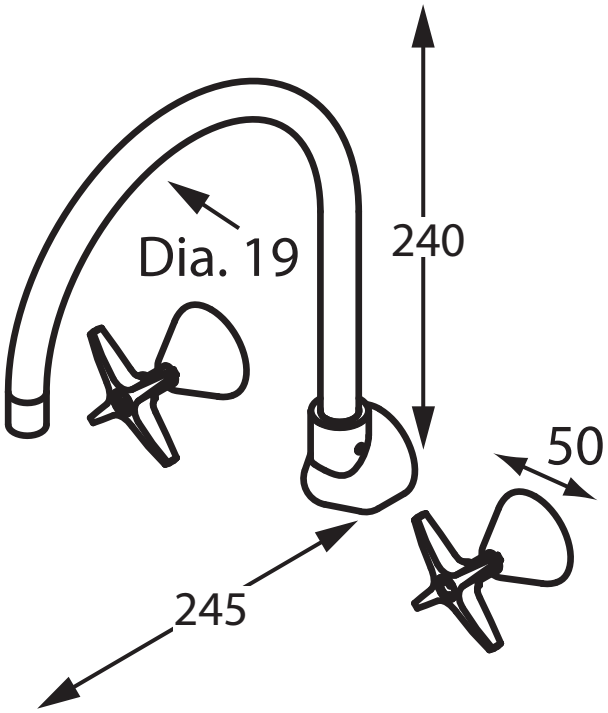

APP-C015 3/4N3S
Wall Sink Set with Curved Swivel Spout

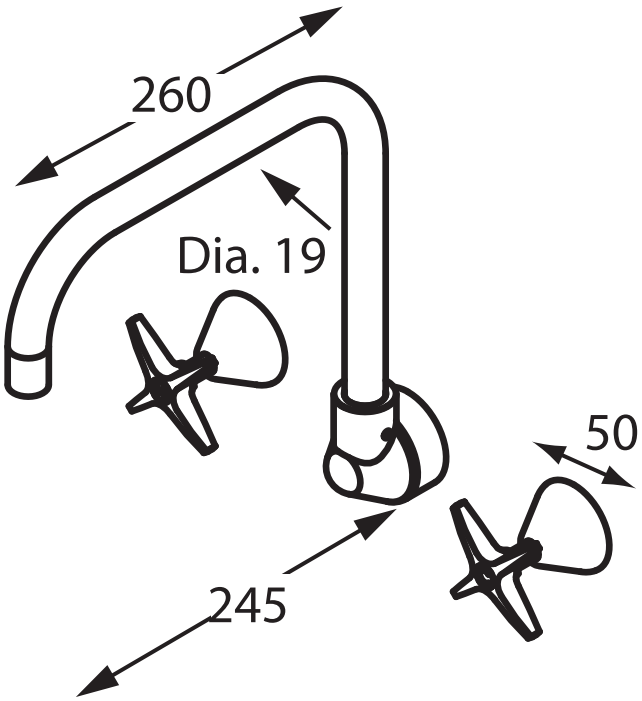

Wall Sink Set with Flat Top Swivel Spout

Accent International
NSW: 3/3 Warrah Street Chatswood 2067 P: 02 9882 2633 F: 02 9882 2644
Email: info@accenttapware.com.au Web: www.accenttapware.com.au